20-Year Warranty

Great news! Your POLYWOOD warranty is already activated, no need to send anything in. Located on the bottom of each item is a sticker with a serial number. **Please keep this number for your records.**

View our full warranty:
polywood.com/warranty

Cleaning Tips

For a Quick Clean:
Simply wipe down with soap and water.

For a Deep Clean:
Wipe on ⅓ bleach and ⅔ water solution with a clean cloth and let it sit on the lumber for a few minutes (this will not affect the color). Then, loosen any dirt and debris that may catch in surface grooves with a soft bristle brush; hose down to rinse.

For a High-Power Clean:
Use a pressure power washer (not exceeding 1,500 psi) to spray off dirt and debris. Apply a ⅓ bleach and ⅔ water solution and scrub with a soft bristle brush. Hose down to rinse.

07/31/2025

POLYWOOD®

Assembly Instructions

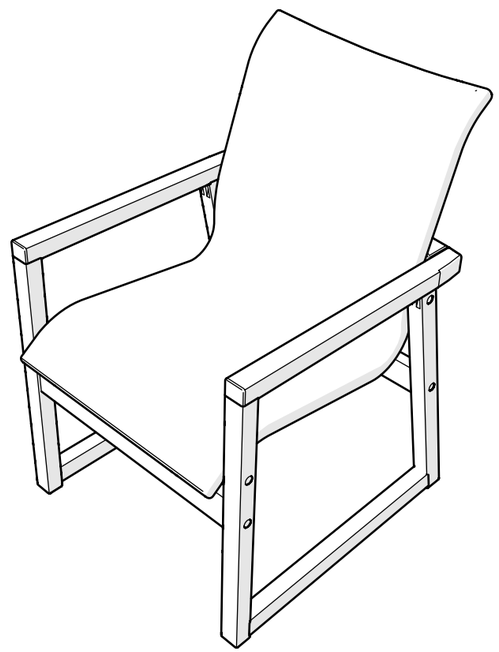

EMD340

Edge Woven Lounge Chair

polywood.com

Thank You

Thank you for choosing POLYWOOD!
We hope your new furniture helps create a gathering place for you and your loved ones to enjoy for many years to come!

Join the POLYWOOD Community

Sign up at:
polywood.com/welcome

You'll be the first to hear about new product launches, giveaways, special offers, and more!

We're Always Here For You

If you have questions regarding assembly instructions, warranty claims, or missing parts, please visit our Help Center at
help.polywood.com

Watch & Learn

For assembly tips and videos visit:
polywood.com/assembly

Share Your Space

We love to see your furniture at home — share a photo or video and tag us for your chance to be featured!
#polywood

@POLYWOOD

pinterest.com/polywood

youtube.com/polywood

facebook.com/polywoodoutdoor

Join thousands of fans in our Outdoor Living Community!
facebook.com/groups/polywoodoutdoorliving

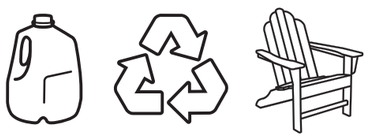

Did You Know?

Our long-lasting furniture is made using plastics that could otherwise pollute oceans and overwhelm landfills — and it can also be recycled when the time comes. Better for the planet, better for all.

Learn more about our story:
genuinePOLYWOOD.com

TOOLS

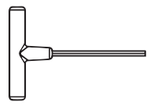

4mm T-handle
hex key (included)

PARTS

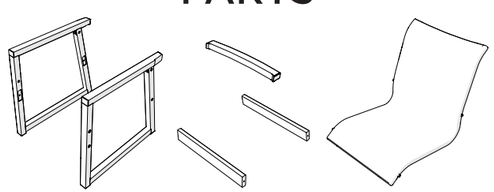

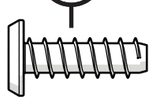

.81" Screw — H.27x.81

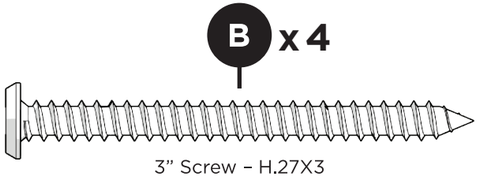

3" Screw – H.27X3

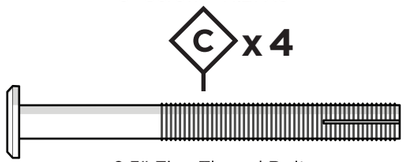

2.5" Fine Thread Bolt
H.25-20X2.5

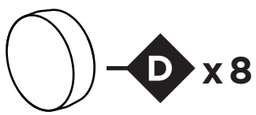

Screw Plug, Wafer — HSPWAFER

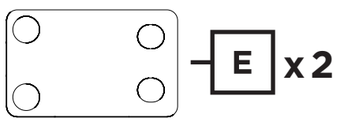

1.25X2X.13 Plate - P15515-AL

Something missing?
Visit **help.polywood.com**

1

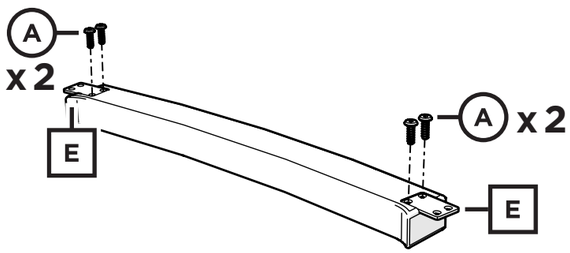

2

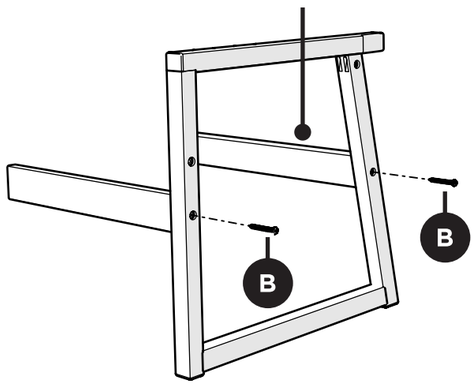

3

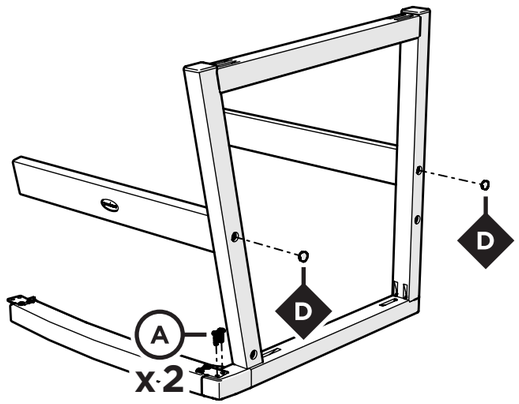

4

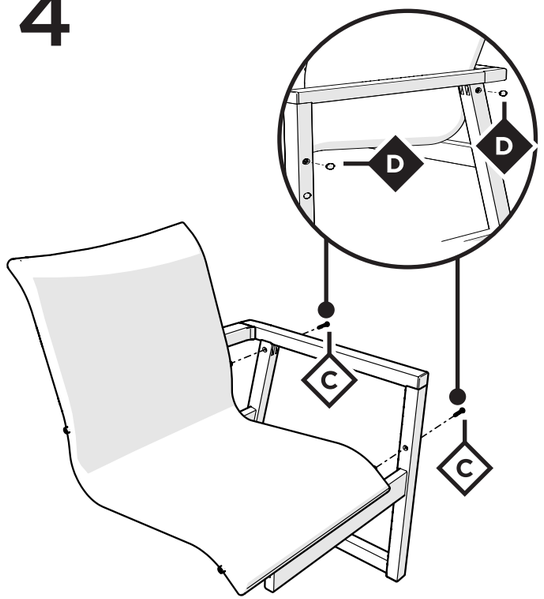

5

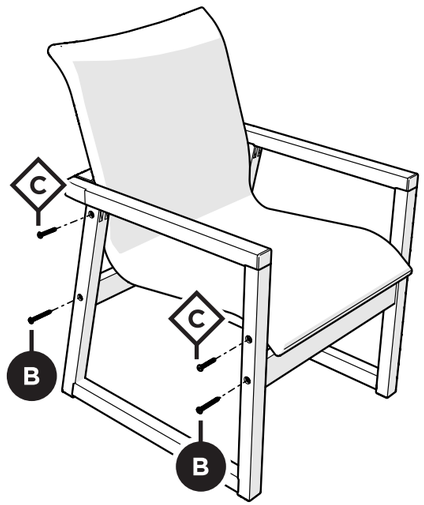

6

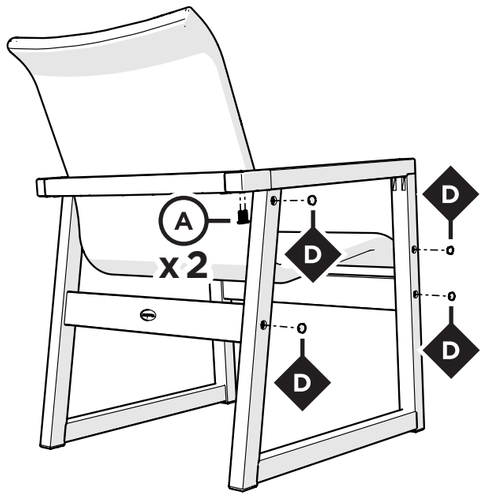

Remove protective plastic film from the logo medallion.